CBM 6E Series

Electronic Cash Drawers

Cash Drawers

CBM design driven manufacturing™

Since 1927

Options & Upgrades

- 12 or 24 volt configurations
- Cash drawer status switch

Available in Beige

Available in Black
Custom colors available through special order

- Intelligent Serial Interface

The IRS 232 offers maximum flexibility when interfacing a serial cash drawer to a computer to create a POS system (optional).

Standard Features

Each unit is equipped with a female RJ style jack in the base of the drawer

Ball bearing slide track system, dual media slots and stainless steel till front

Removable #5P plastic money tray with adjustable bill and coin dividers

Key lock
(keyed alike available)

CBM 2 YEARS or 2 MILLION OPENINGS GUARANTEE

CBM ISO 9001:2000 CERTIFIED

POWDER COATED™

sales@cbmmetal.com • www.cbmmetal.com • 800.387.4834

CBM 6E Series

Electronic Cash Drawers

Accessories

- **Under Counter Mounting Bracket**

Cables

- CBL-2544-B Epson, Cable (2 C/D)

Other Cables Available:

- CBL-2544-A Epson, Citizen 3535 Cable
- CBL-2549 Citizen (Molex) Cable
- CBL-2549-A Citizen Y Cable for IDP 3535
- CBL-2549-B Citizen Y Cable for IDP 3545/46, 3210-CBM 230/231
- CBL-2547-A Star Micronics
- CBL-2547-C Star Micro. Y Cable (2C/D)
- CBL-2531-J1 Ithaca Coax Cable
- CBL-2531-J3 Ithaca 60,80,90,150 Series (Drawer 1)
- CBL-2567 Axiom

Equipped with a DB 25 female serial connector and an external 120V to 12V step down power supply

Functionality and Dependability

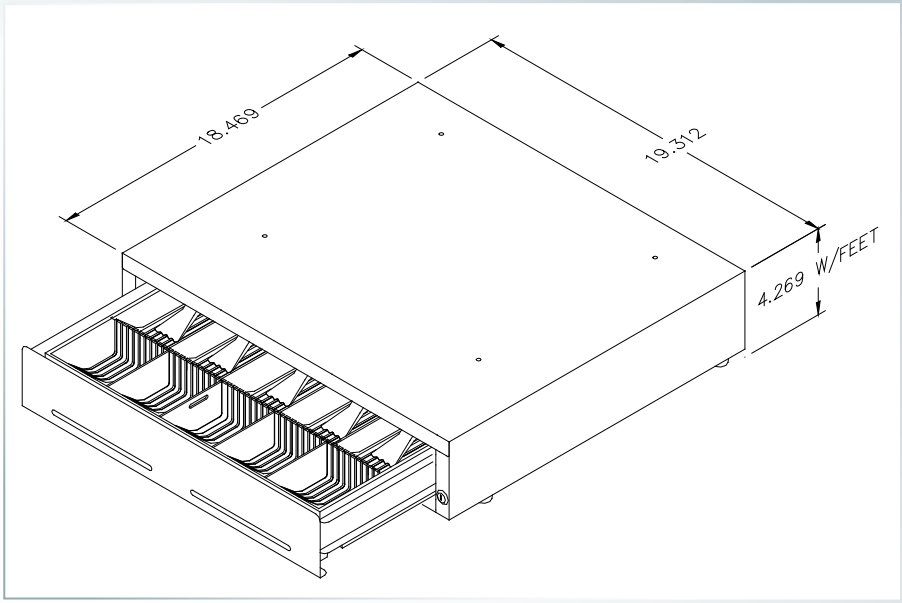

- Manufactured from 20-gauge cold rolled steel welded and reinforced at overlapping seams for an extra strong case
- 6E Cash Drawer provides a sturdy platform for your POS peripherals
- Manufactured using 20-gauge cold rolled steel and high quality components
- Powder coated for sustained durability

The 6E is available in two versions:

- Smartest drawer with IRS-232 Intelligent Serial Interface which offers maximum flexibility when interfacing with a serial cash drawer to POS System
- Available in 12 or 24 volt Black or Beige

Specifications:

Shipping weight: 28 Lbs (12.7 kg)

Dimensions: 4.269” H x 19.312” W x 18.469” D (11 cm H x 49.1 cm W x 47 cm D)

Order additional Money Trays and/or Storage Locker

#5P Plastic Money Tray

#5S Steel Money Tray

Cash Tray Locker (# A08046)

sales@cbmmetal.com • www.cbmmetal.com • 800.387.4834