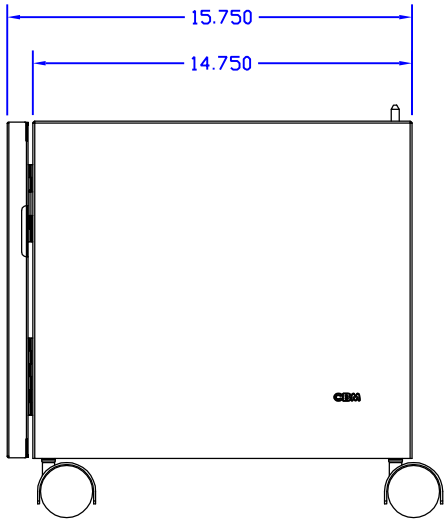


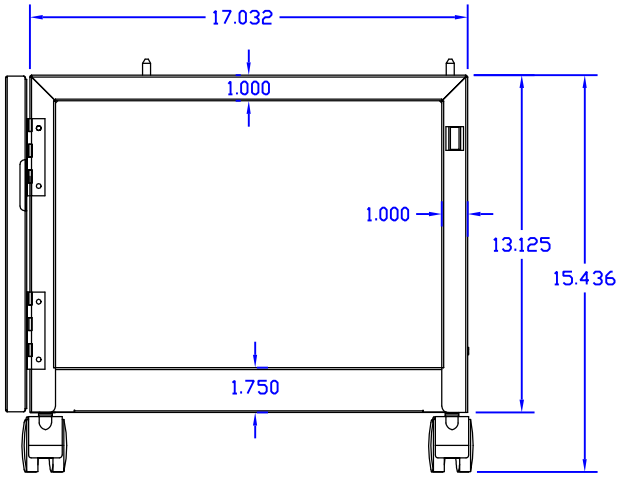


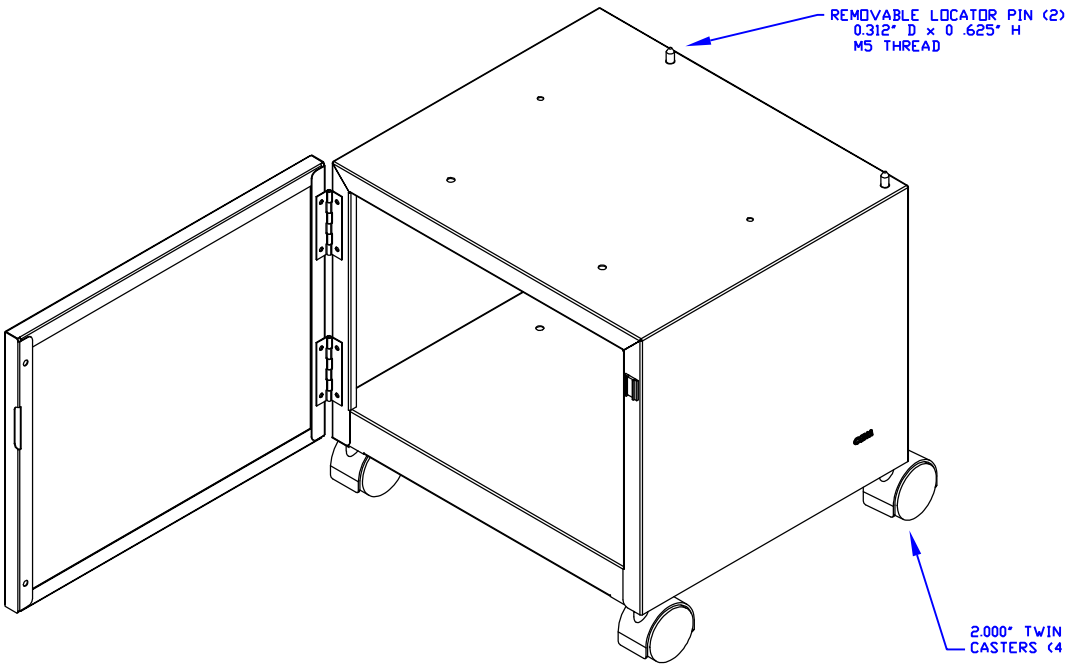


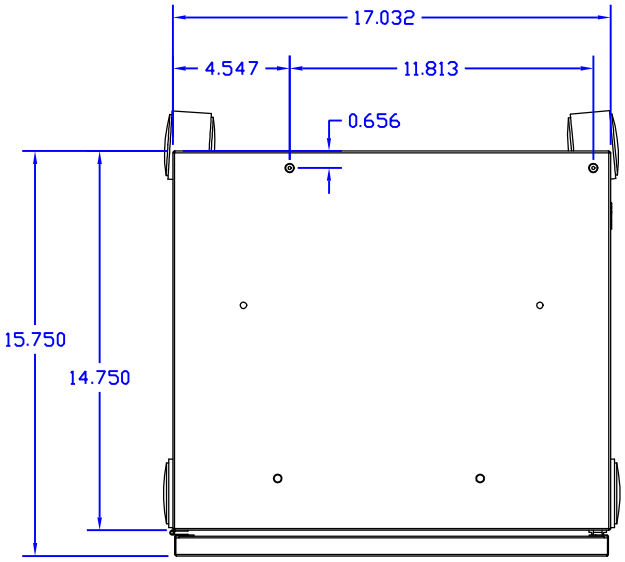


CBM
8750 HOLGATE CRESCENT, MILTON, ON, L9T 0K3, 1-800-387-4834
www.cbmmetal.com

RICOH FAC-44 (#415129)
COPIER STAND
RICOH

E2009016

PRODUCT No.: A-44FAC-6636